TAVAKOL ELECTRONIC
توکل الکترونیک
مرجع تخصصی تأمین قطعات الکترونیکی اورجینال
این دیتاشیت توسط توکل الکترونیک تهیه و ارائه شده است.
جهت مشاهده قیمت، موجودی و ثبت سفارش این قطعه به وب‌سایت توکل الکترونیک مراجعه فرمایید.
مشاهده قیمت و خرید
برای خرید و مشاهده سایر محصولات کلیک کنید

STB9NK90Z, STF9NK90Z STP9NK90Z, STW9NK90Z

N-channel 900 V, 1.1 Ω, 8 A, TO-220, TO-220FP, D²PAK, TO-247
Zener-protected SuperMESH™ Power MOSFET

Features

Type	V_{DSS}	$R_{DS(on)}$ max.	I_D	Pw
STB9NK90Z	900V	<1.3Ω	8A	160 W
STW9NK90Z				160 W
STP9NK90Z				160 W
STF9NK90Z				40 W

- Extremely high dv/dt capability
- 100% avalanche tested
- Gate charge minimized

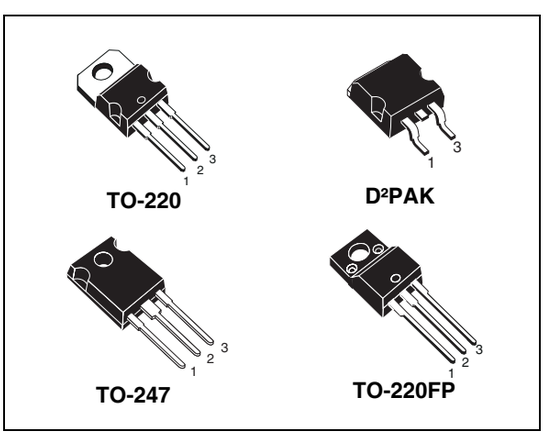

Application

- Switching applications

Description

The SuperMESH™ series is obtained through an optimization of STMicroelectronics' well-established strip-based PowerMESH™ layout. In addition to pushing on-resistance significantly lower, it also ensures very good dv/dt capability for the most demanding applications. This series complement STs' full range of high voltage power MOSFETs.

Figure 1. Internal schematic diagram

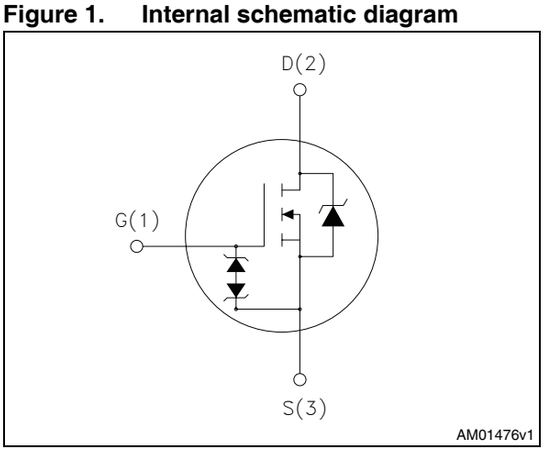

Table 1. Device summary

Order codes	Marking	Package	Packaging
STB9NK90Z	B9NK90	D²PAK	Tape and reel
STF9NK90Z	F9NK90Z	TO-220FP	Tube
STP9NK90Z	P9NK90Z	TO-220	
STW9NK90Z	W9NK90Z	TO-247	

Contents

1 Electrical ratings 3

2 Electrical characteristics 4

2.1 Electrical characteristics (curves) 6

3 Test circuits 9

4 Package mechanical data 10

5 Packaging mechanical data 15

6 Revision history 16

1 Electrical ratings

Table 2. Absolute maximum ratings

Symbol	Parameter	Value		Unit
		TO-220, D²PAK TO-247	TO-220FP	
V_{DS}	Drain-source voltage (V_{GS} = 0)	900		V
V_{GS}	Gate-source voltage	± 30		V
I_D	Drain current (continuous) at T_C = 25 °C	8	8(1)	A
I_D	Drain current (continuous) at T_C=100 °C	5	5(1)	A
I_{DM}(2)	Drain current (pulsed)	32	32(1)	A
P_{TOT}	Total dissipation at T_C = 25 °C	160	40	W
	Derating Factor	1.28	0.32	W/°C
Vesd(G-S)	G-S ESD (HBM C=100 pF, R=1.5 kΩ)	4		KV
dv/dt(3)	Peak diode recovery voltage slope	4.5		V/ns
V_{ISO}	Insulation withstand voltage (RMS) from all three leads to external heat sink (t=1s;T_C=25°C)	--	2500	V
T_J T_{stg}	Operating junction temperature Storage temperature	-55 to 150		°C

1. Limited only by maximum temperature allowed
2. Pulse width limited by safe operating area
3. $I_{SD} \leq 10$ A, di/dt ≤ 200 A/µs, $V_{DD} \leq V_{(BR)DSS}$, $T_j \leq T_{Jmax.}$

Table 3. Thermal data

Symbol	Parameter	Value			Unit
		TO-220 D²PAK	TO-220FP	TO-247	
$R_{thj\text{-}case}$	Thermal resistance junction-case max	0.78	3.1	0.78	°C/W
$R_{thj\text{-}a}$	Thermal resistance junction-ambient max	62.5		50	°C/W
T_l	Maximum lead temperature for soldering purpose	300			°C

Table 4. Avalanche characteristics

Symbol	Parameter	Value	Unit
I_{AR}	Avalanche current, repetitive or not-repetitive (pulse width limited by Tj max.)	8	A
E_{AS}	Single pulse avalanche energy (starting Tj=25 °C, I_D= I_{AR}, V_{DD}= 50 V) *(see Figure 22)(see Figure 23)*	300	mJ

2 Electrical characteristics

(T_{CASE} = 25 °C unless otherwise specified)

Table 5. On/off states

Symbol	Parameter	Test conditions	Min.	Typ.	Max.	Unit
$V_{(BR)DSS}$	Drain-source breakdown voltage	I_D = 1 mA, V_{GS}= 0	900			V
I_{DSS}	Zero gate voltage drain current (V_{GS} = 0)	V_{DS} = max rating, V_{DS} = max rating @125 °C			1 50	µA µA
I_{GSS}	Gate body leakage current (V_{DS} = 0)	V_{GS} = ± 20 V, V_{DS} = 0			±10	µA
$V_{GS(th)}$	Gate threshold voltage	V_{DS} = V_{GS}, I_D = 100 µA	3	3.75	4.5	V
$R_{DS(on)}$	Static drain-source on resistance	V_{GS} = 10 V, I_D = 3.6 A		1.1	1.3	Ω

Table 6. Dynamic

Symbol	Parameter	Test conditions	Min.	Typ.	Max.	Unit
C_{iss} C_{oss} C_{rss}	Input capacitance Output capacitance Reverse transfer capacitance	V_{DS} = 25 V, f = 1 MHz, V_{GS} = 0	-	2115 190 40	-	pF pF pF
$C_{oss\ eq}$(1)	Equivalent output capacitance	V_{GS} = 0, V_{DS} = 0 to 720 V	-	115	-	pF
Q_g Q_{gs} Q_{gd}	Total gate charge Gate-source charge Gate-drain charge	V_{DD} = 720 V, I_D = 8 A V_{GS} =10 V *Figure 20*	-	72 14 38	-	nC nC nC

1. $C_{oss\ eq.}$ is defined as a constant equivalent capacitance giving the same charging time as C_{oss} when V_{DS} increases from 0 to 80% V_{DSS}

Table 7. Switching times

Symbol	Parameter	Test conditions	Min.	Typ.	Max.	Unit
$t_{d(on)}$ t_r	Turn-on delay time Rise Time	V_{DD} = 450 V, I_D = 4 A, R_G = 4.7 Ω, V_{GS} = 10 V *Figure 19* *Figure 24*	-	22 13	-	ns ns
$t_{d(off)}$ t_f	Turn-off delay time Fall time		-	55 28	-	ns ns

Table 8. Source drain diode

Symbol	Parameter	Test conditions	Min	Typ.	Max	Unit
I_{SD}	Source-drain current		-		8	A
I_{SDM}(1)	Source-drain current (pulsed)				32	A
V_{SD}(2)	Forward on voltage	I_{SD} = 8 A, V_{GS}=0	-		1.6	V
t_{rr} Q_{rr} I_{RRM}	Reverse recovery time Reverse recovery charge Reverse recovery current	I_{SD} = 8 A, di/dt = 100 A/µs, V_{DD} = 50 V, Tj = 150 °C *Figure 21*	-	950 10 21		ns µC A

1. Pulse width limited by safe operating area
2. Pulsed: pulse duration=300 µs, duty cycle 1.5%

Table 9. Gate-source Zener diode

Symbol	Parameter	Test conditions	Min.	Typ.	Max.	Unit
BV_{GSO}	Gate-source breakdown voltage	I_{GS} = ±1 mA(open drain)	30	-		V

The built-in back-to-back Zener diodes have specifically been designed to enhance not only the device's ESD capability, but also to make them safely absorb possible voltage transients that may occasionally be applied from gate to source. In this respect the Zener voltage is appropriate to achieve an efficient and cost-effective intervention to protect the device's integrity. These integrated Zener diodes thus avoid the usage of external components.

2.1 Electrical characteristics (curves)

Figure 2. Safe operating area for TO-220, D²PAK

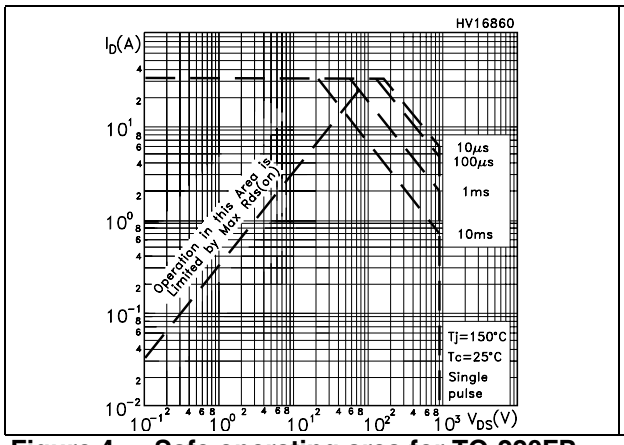

Figure 3. Thermal impedance for TO-220, D²PAK

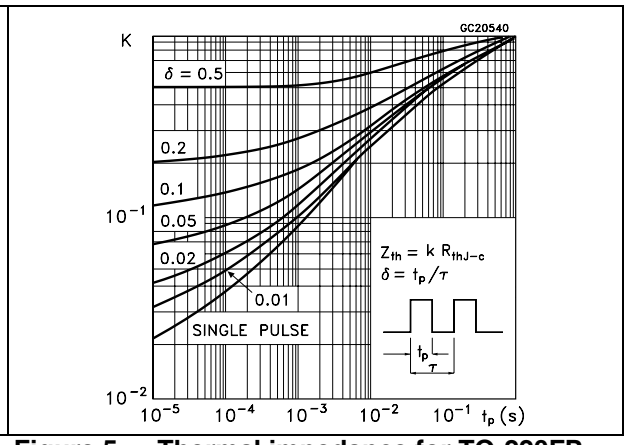

Figure 4. Safe operating area for TO-220FP

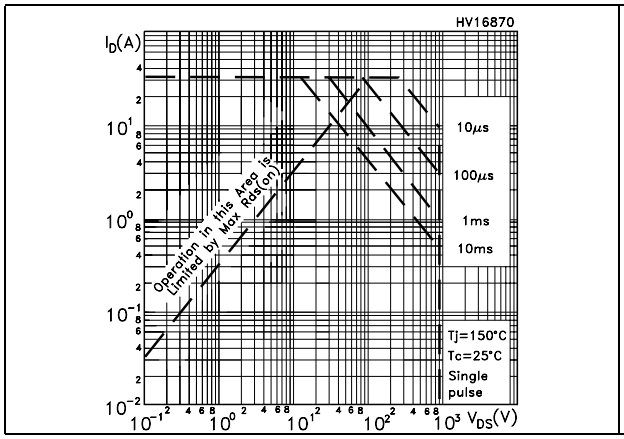

Figure 5. Thermal impedance for TO-220FP

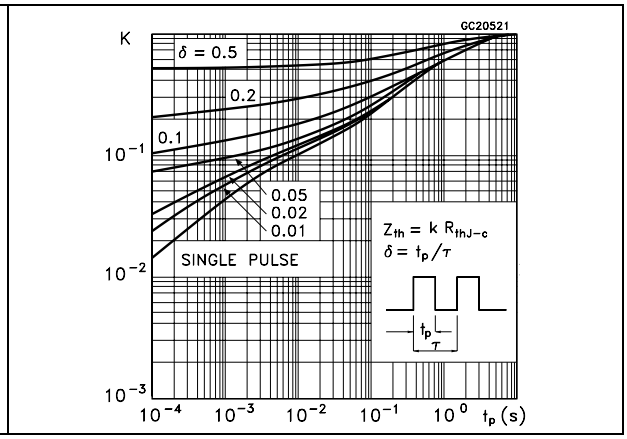

Figure 6. Safe operating area for TO-247

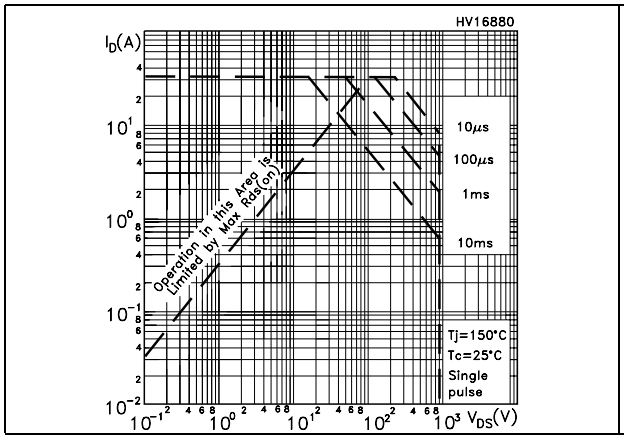

Figure 7. Thermal impedance for TO-247

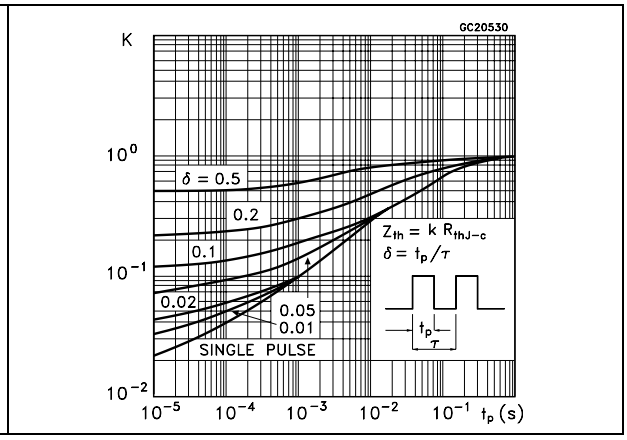

Figure 8. Output characteristics

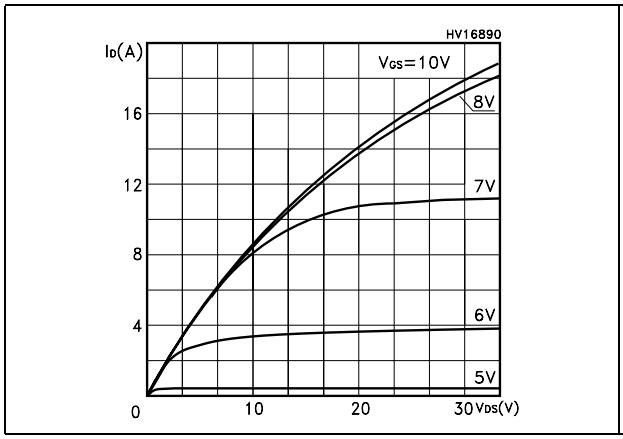

Figure 9. Transfer characteristics

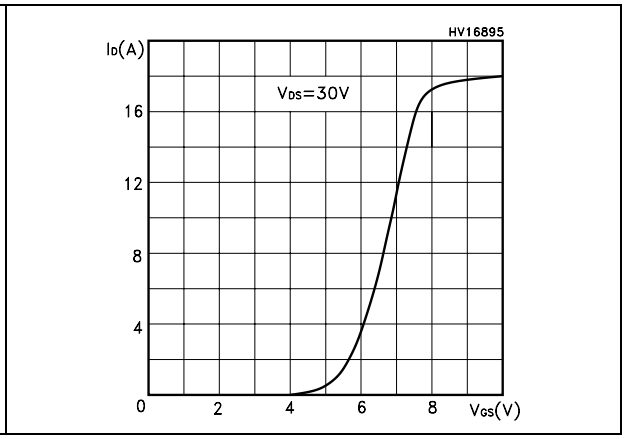

Figure 10. Transconductance

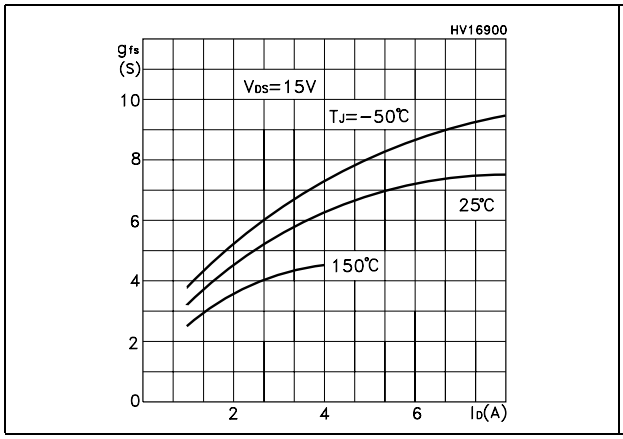

Figure 11. Static drain-source on resistance

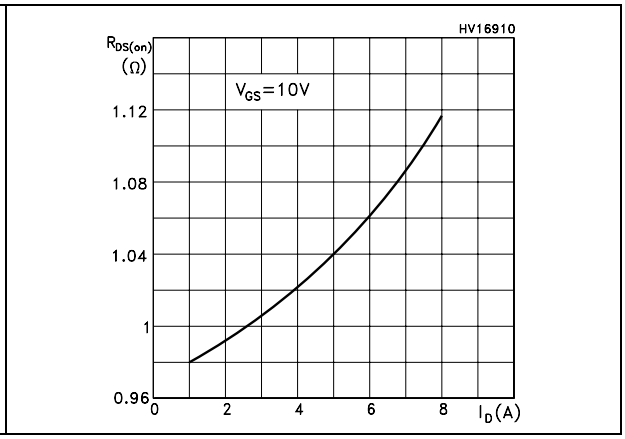

Figure 12. Gate charge vs gate-source voltage

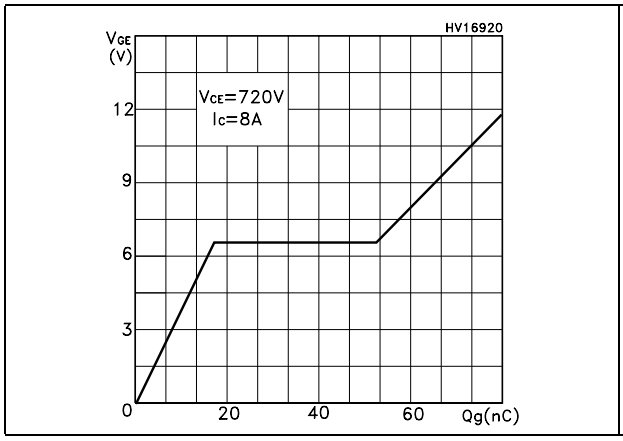

Figure 13. Capacitance variations

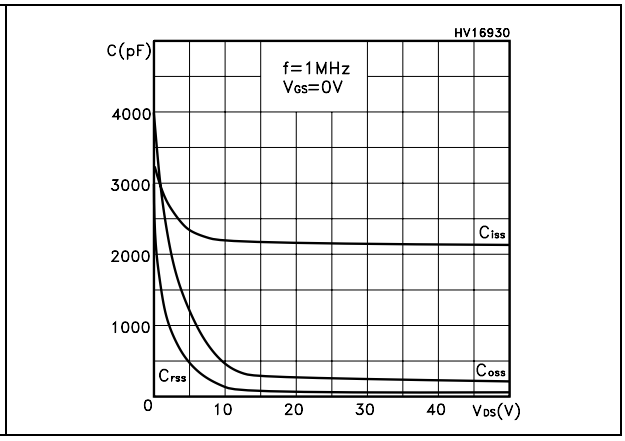

Figure 14. Normalized gate threshold voltage vs temperature

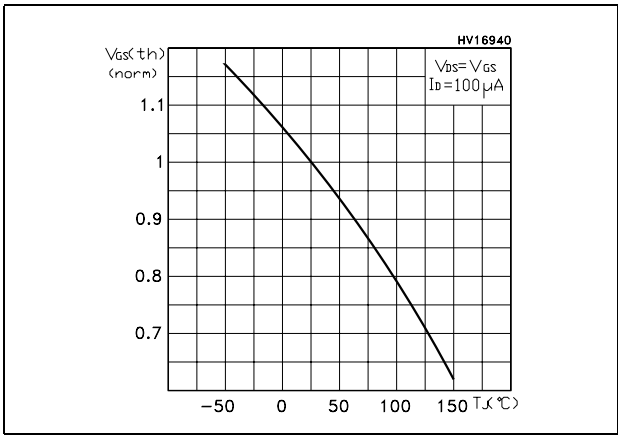

Figure 15. Normalized on resistance vs temperature

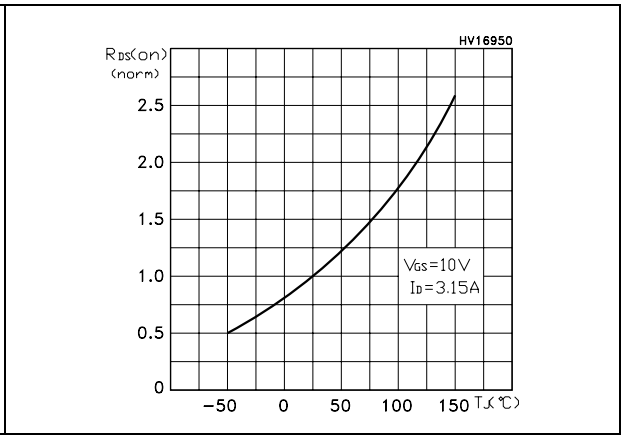

Figure 16. Source-drain diode forward characteristics

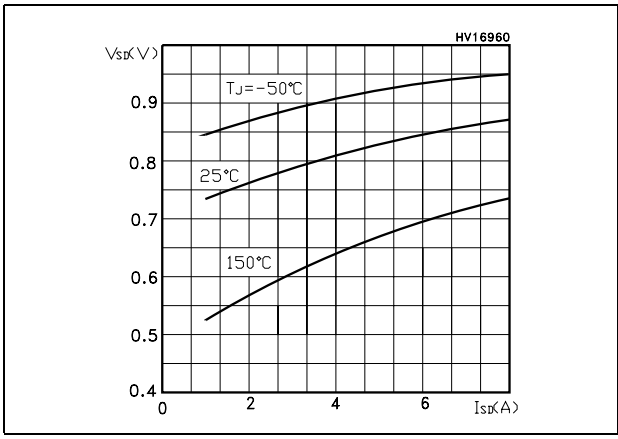

Figure 17. Normalized B_{VDSS} vs temperature

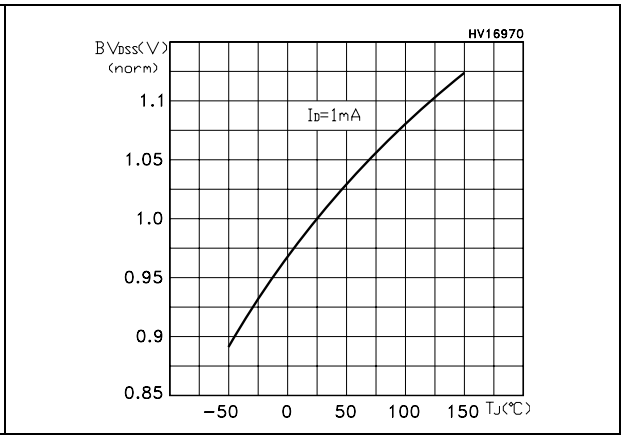

Figure 18. Maximum avalanche energy vs temperature

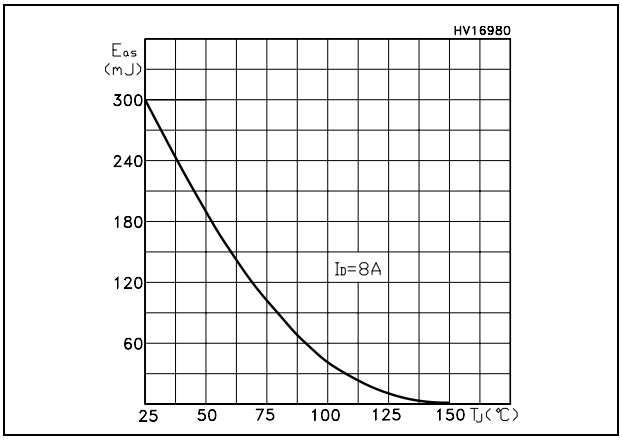

3 Test circuits

Figure 19. Switching times test circuit for resistive load

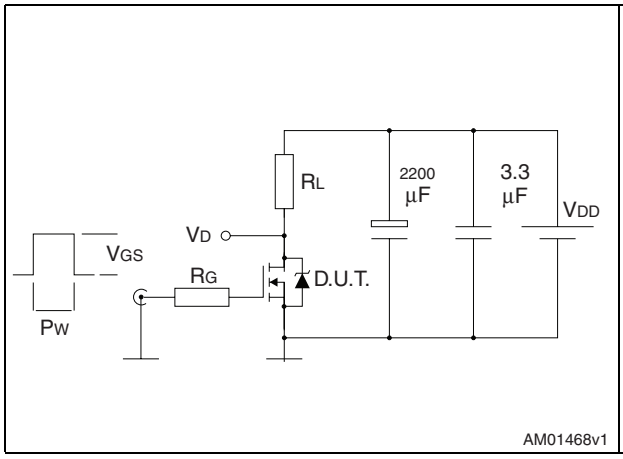

Figure 20. Gate charge test circuit

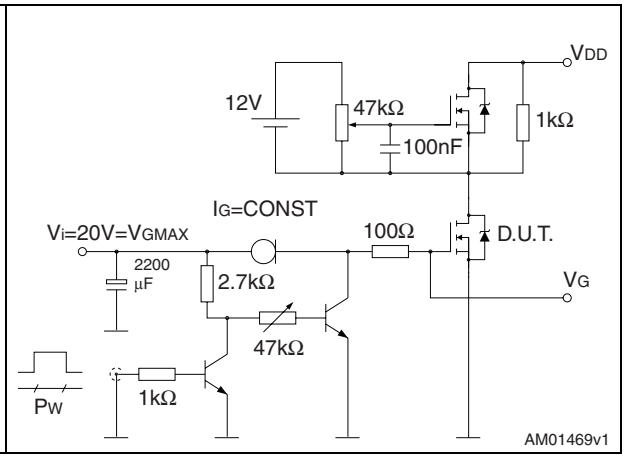

Figure 21. Test circuit for inductive load switching and diode recovery times

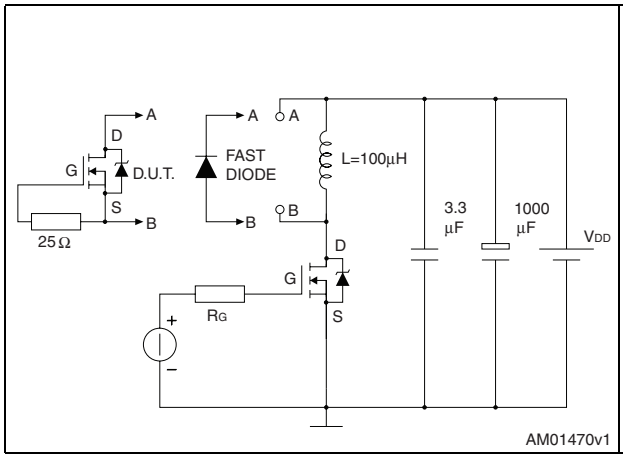

Figure 22. Unclamped Inductive load test circuit

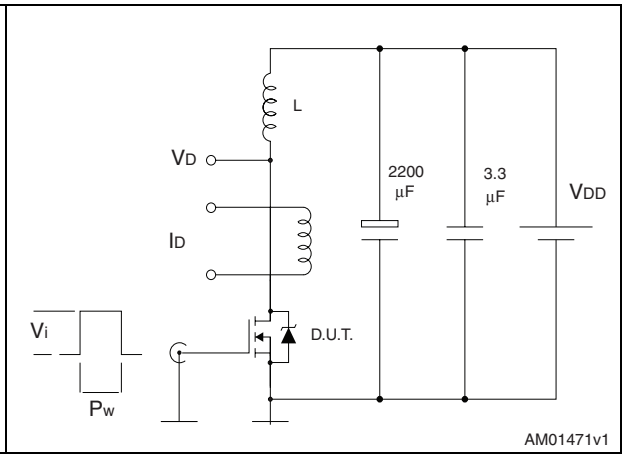

Figure 23. Unclamped inductive waveform

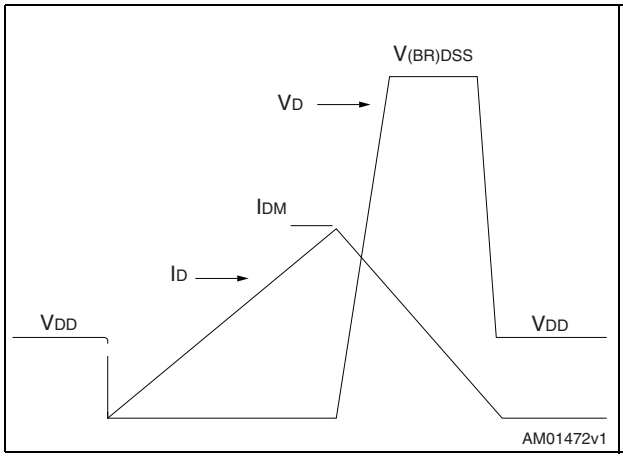

Figure 24. Switching time waveform

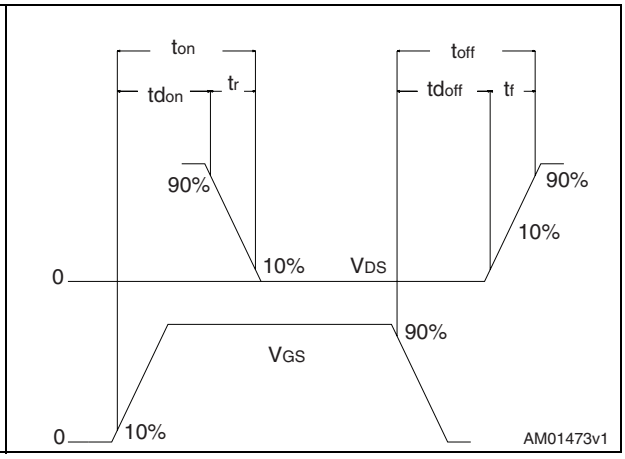

4 Package mechanical data

In order to meet environmental requirements, ST offers these devices in different grades of ECOPACK® packages, depending on their level of environmental compliance. ECOPACK® specifications, grade definitions and product status are available at: www.st.com. ECOPACK is an ST trademark.

Table 10. TO-220FP mechanical data

Dim.	mm		
	Min.	Typ.	Max.
A	4.4		4.6
B	2.5		2.7
D	2.5		2.75
E	0.45		0.7
F	0.75		1
F1	1.15		1.70
F2	1.15		1.70
G	4.95		5.2
G1	2.4		2.7
H	10		10.4
L2		16	
L3	28.6		30.6
L4	9.8		10.6
L5	2.9		3.6
L6	15.9		16.4
L7	9		9.3
Dia	3		3.2

Figure 25. TO-220FP drawing

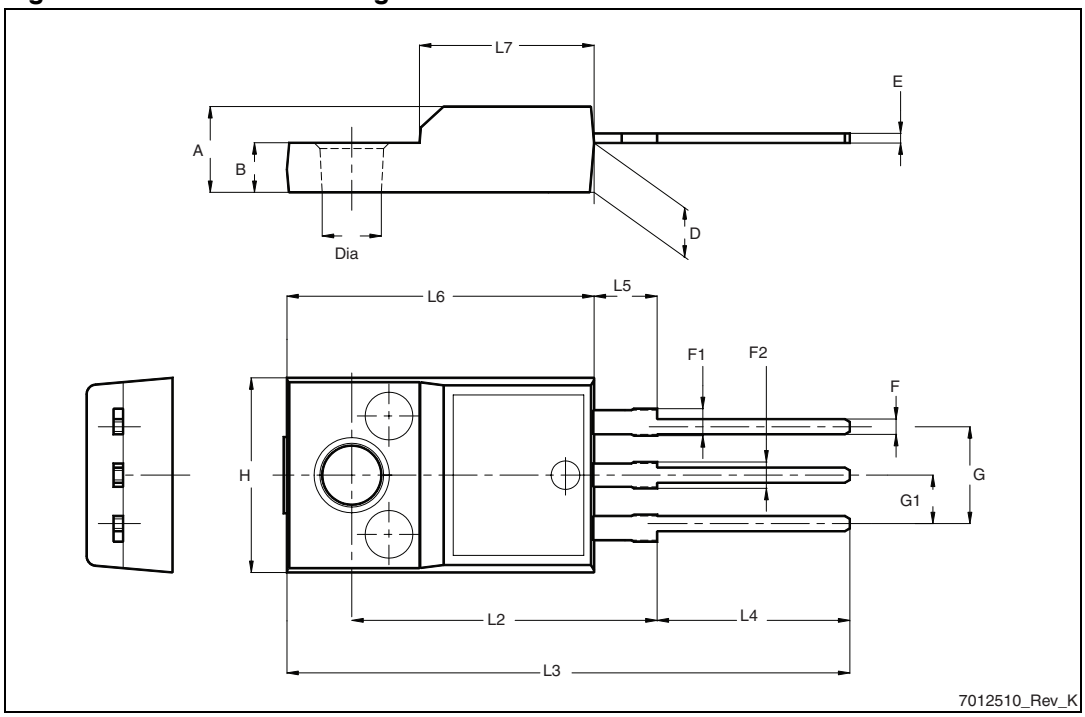

TO-220 type A mechanical data

Dim	mm		
	Min	Typ	Max
A	4.40		4.60
b	0.61		0.88
b1	1.14		1.70
c	0.48		0.70
D	15.25		15.75
D1		1.27	
E	10		10.40
e	2.40		2.70
e1	4.95		5.15
F	1.23		1.32
H1	6.20		6.60
J1	2.40		2.72
L	13		14
L1	3.50		3.93
L20		16.40	
L30		28.90	
∅P	3.75		3.85
Q	2.65		2.95

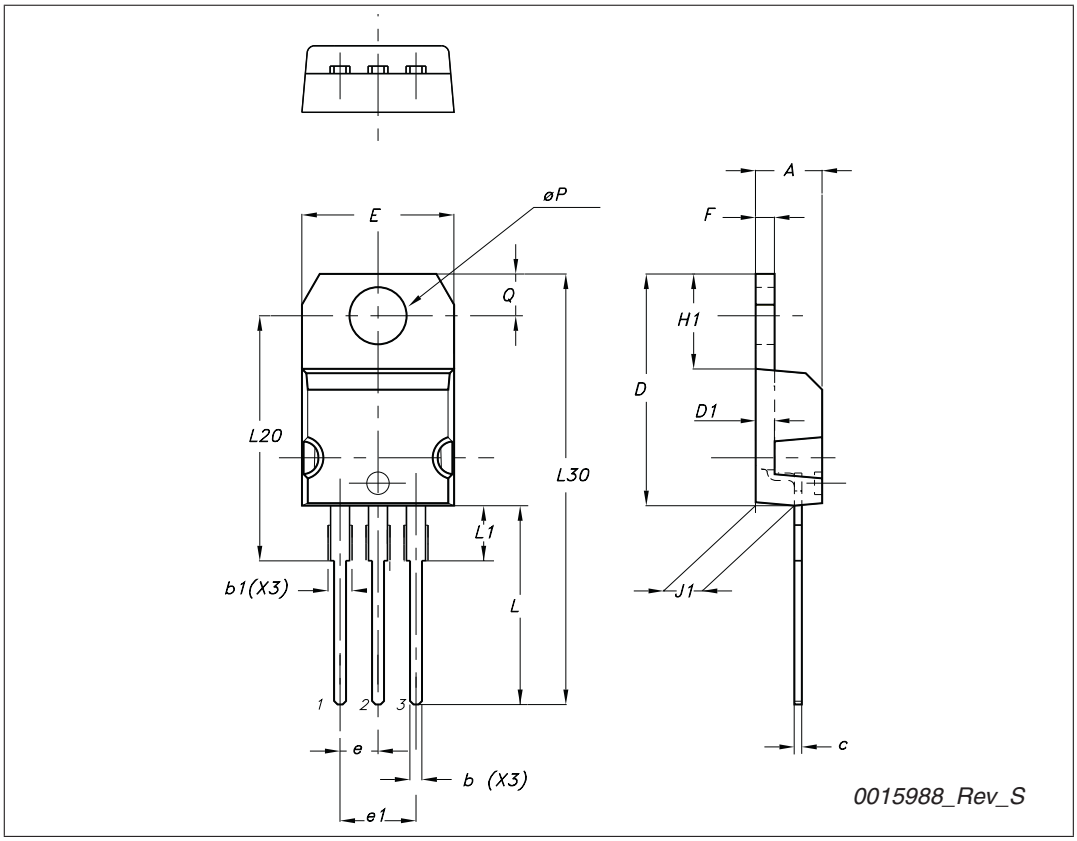

TO-247 mechanical data

Dim.	mm.		
	Min.	Typ.	Max.
A	4.85		5.15
A1	2.20		2.60
b	1.0		1.40
b1	2.0		2.40
b2	3.0		3.40
c	0.40		0.80
D	19.85		20.15
E	15.45		15.75
e		5.45	
L	14.20		14.80
L1	3.70		4.30
L2		18.50	
øP	3.55		3.65
øR	4.50		5.50
S		5.50	

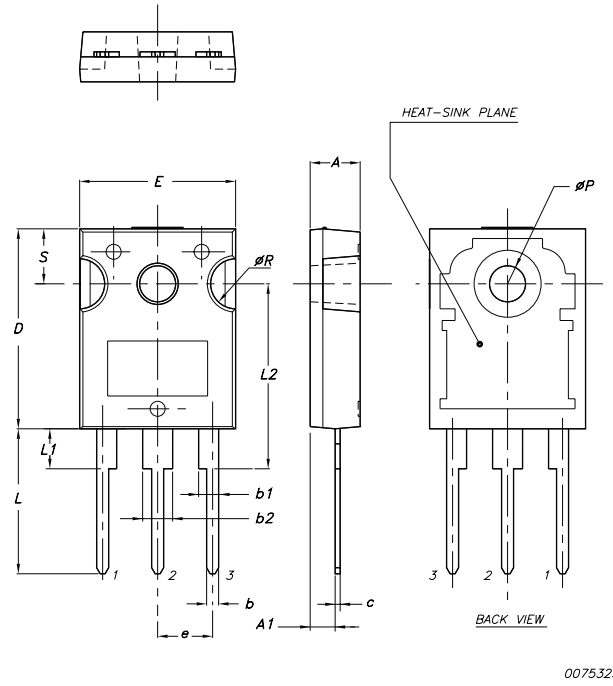

D^2PAK (TO-263) mechanical data

Dim	mm			inch		
	Min	Typ	Max	Min	Typ	Max
A	4.40		4.60	0.173		0.181
A1	0.03		0.23	0.001		0.009
b	0.70		0.93	0.027		0.037
b2	1.14		1.70	0.045		0.067
c	0.45		0.60	0.017		0.024
c2	1.23		1.36	0.048		0.053
D	8.95		9.35	0.352		0.368
D1	7.50			0.295		
E	10		10.40	0.394		0.409
E1	8.50			0.334		
e		2.54			0.1	
e1	4.88		5.28	0.192		0.208
H	15		15.85	0.590		0.624
J1	2.49		2.69	0.099		0.106
L	2.29		2.79	0.090		0.110
L1	1.27		1.40	0.05		0.055
L2	1.30		1.75	0.051		0.069
R		0.4			0.016	
V2	0°		8°	0°		8°

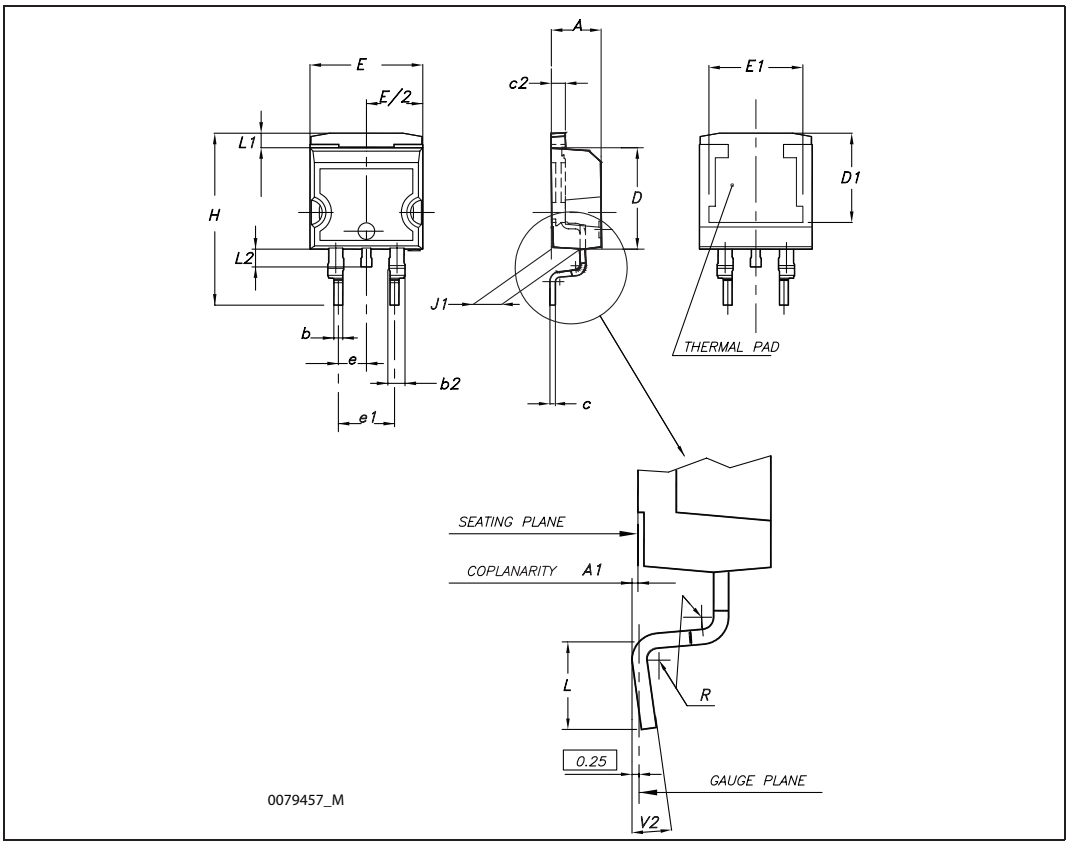

5 Packaging mechanical data

D²PAK FOOTPRINT

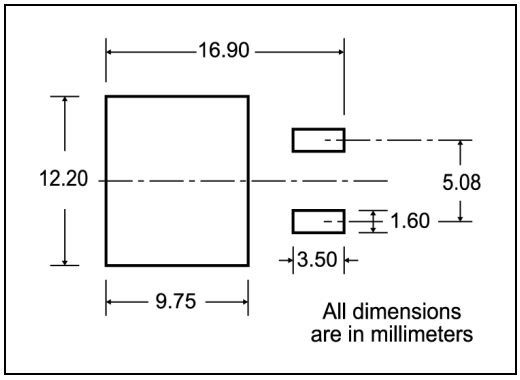

TAPE AND REEL SHIPMENT

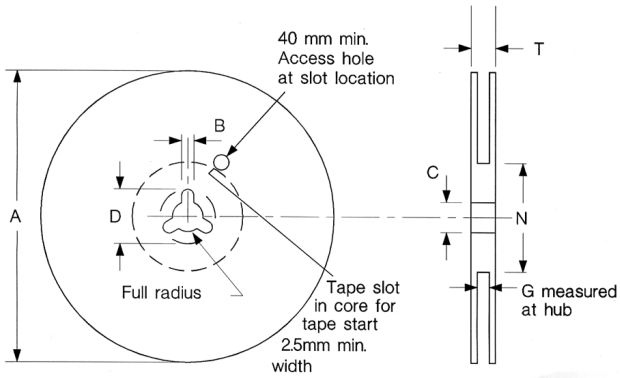

REEL MECHANICAL DATA

DIM.	mm		inch	
	MIN.	MAX.	MIN.	MAX.
A		330		12.992
B	1.5		0.059	
C	12.8	13.2	0.504	0.520
D	20.2		0795	
G	24.4	26.4	0.960	1.039
N	100		3.937	
T		30.4		1.197

BASE QTY	BULK QTY
1000	1000

TAPE MECHANICAL DATA

DIM.	mm		inch	
	MIN.	MAX.	MIN.	MAX.
A0	10.5	10.7	0.413	0.421
B0	15.7	15.9	0.618	0.626
D	1.5	1.6	0.059	0.063
D1	1.59	1.61	0.062	0.063
E	1.65	1.85	0.065	0.073
F	11.4	11.6	0.449	0.456
K0	4.8	5.0	0.189	0.197
P0	3.9	4.1	0.153	0.161
P1	11.9	12.1	0.468	0.476
P2	1.9	2.1	0.075	0.082
R	50		1.574	
T	0.25	0.35	0.0098	0.0137
W	23.7	24.3	0.933	0.956

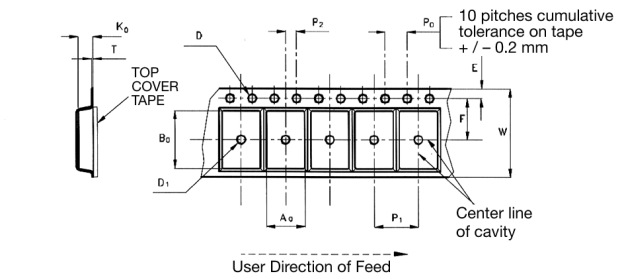

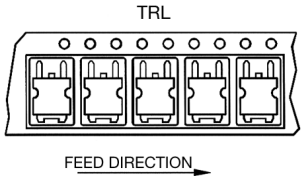

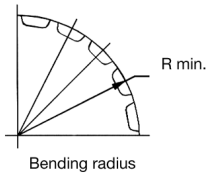

* on sales type

6 Revision history

Table 11. Revision history

Date	Revision	Changes
08-Sep-2005	2	Complete version
27-Oct-2005	3	Inserted ecopack indication
20-Jul-2006	4	New template, no content change
20-Mar-2007	5	Typo mistake on cover page
13-Jul-2007	6	Corrected unit on *Table 5.: On/off states*
19-May-2010	7	Corrected *Figure 18: Maximum avalanche energy vs temperature*

Please Read Carefully:

Information in this document is provided solely in connection with ST products. STMicroelectronics NV and its subsidiaries (“ST”) reserve the right to make changes, corrections, modifications or improvements, to this document, and the products and services described herein at any time, without notice.

All ST products are sold pursuant to ST’s terms and conditions of sale.

Purchasers are solely responsible for the choice, selection and use of the ST products and services described herein, and ST assumes no liability whatsoever relating to the choice, selection or use of the ST products and services described herein.

No license, express or implied, by estoppel or otherwise, to any intellectual property rights is granted under this document. If any part of this document refers to any third party products or services it shall not be deemed a license grant by ST for the use of such third party products or services, or any intellectual property contained therein or considered as a warranty covering the use in any manner whatsoever of such third party products or services or any intellectual property contained therein.

UNLESS OTHERWISE SET FORTH IN ST’S TERMS AND CONDITIONS OF SALE ST DISCLAIMS ANY EXPRESS OR IMPLIED WARRANTY WITH RESPECT TO THE USE AND/OR SALE OF ST PRODUCTS INCLUDING WITHOUT LIMITATION IMPLIED WARRANTIES OF MERCHANTABILITY, FITNESS FOR A PARTICULAR PURPOSE (AND THEIR EQUIVALENTS UNDER THE LAWS OF ANY JURISDICTION), OR INFRINGEMENT OF ANY PATENT, COPYRIGHT OR OTHER INTELLECTUAL PROPERTY RIGHT.

UNLESS EXPRESSLY APPROVED IN WRITING BY AN AUTHORIZED ST REPRESENTATIVE, ST PRODUCTS ARE NOT RECOMMENDED, AUTHORIZED OR WARRANTED FOR USE IN MILITARY, AIR CRAFT, SPACE, LIFE SAVING, OR LIFE SUSTAINING APPLICATIONS, NOR IN PRODUCTS OR SYSTEMS WHERE FAILURE OR MALFUNCTION MAY RESULT IN PERSONAL INJURY, DEATH, OR SEVERE PROPERTY OR ENVIRONMENTAL DAMAGE. ST PRODUCTS WHICH ARE NOT SPECIFIED AS "AUTOMOTIVE GRADE" MAY ONLY BE USED IN AUTOMOTIVE APPLICATIONS AT USER’S OWN RISK.

Resale of ST products with provisions different from the statements and/or technical features set forth in this document shall immediately void any warranty granted by ST for the ST product or service described herein and shall not create or extend in any manner whatsoever, any liability of ST.

ST and the ST logo are trademarks or registered trademarks of ST in various countries.

Information in this document supersedes and replaces all information previously supplied.

The ST logo is a registered trademark of STMicroelectronics. All other names are the property of their respective owners.

© 2010 STMicroelectronics - All rights reserved

STMicroelectronics group of companies

Australia - Belgium - Brazil - Canada - China - Czech Republic - Finland - France - Germany - Hong Kong - India - Israel - Italy - Japan - Malaysia - Malta - Morocco - Philippines - Singapore - Spain - Sweden - Switzerland - United Kingdom - United States of America

www.st.com