TAVAKOL ELECTRONIC
توکل الکترونیک
مرجع تخصصی تأمین قطعات الکترونیکی اورجینال
این دیتاشیت توسط توکل الکترونیک تهیه و ارائه شده است.
جهت مشاهده قیمت، موجودی و ثبت سفارش این قطعه به وب‌سایت توکل الکترونیک مراجعه فرمایید.
مشاهده قیمت و خرید
برای خرید و مشاهده سایر محصولات کلیک کنید

STP36NF06
STP36NF06FP

N-CHANNEL 60V - 0.032 Ω - 30A TO-220/TO-220FP
STripFET™ II POWER MOSFET

TYPE	V_{DSS}	$R_{DS(on)}$	I_D
STP36NF06	60 V	<0.040 Ω	30 A
STP36NF06FP	60 V	<0.040 Ω	18 A(*)

- TYPICAL R_{DS}(on) = 0.032 Ω
- EXCEPTIONAL dv/dt CAPABILITY
- 100% AVALANCHE TESTED
- APPLICATION ORIENTED CHARACTERIZATION

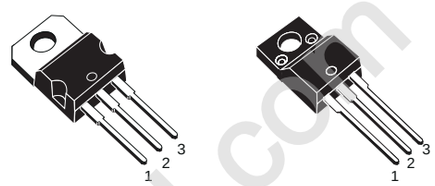

TO-220 TO-220FP

DESCRIPTION
This Power MOSFET is the latest development of STMicroelectronis unique "Single Feature Size™" strip-based process. The resulting transistor shows extremely high packing density for low on-resistance, rugged avalanche characteristics and less critical alignment steps therefore a remarkable manufacturing reproducibility.

APPLICATIONS
- HIGH CURRENT, HIGH SWITCHING SPEED

INTERNAL SCHEMATIC DIAGRAM

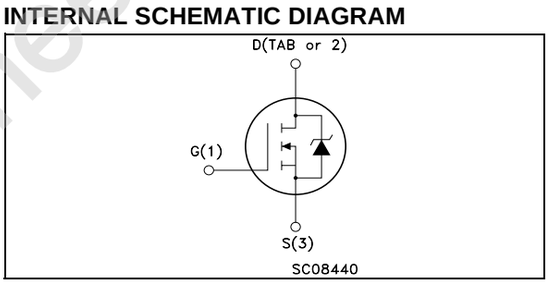

Ordering Information

SALES TYPE	MARKING	PACKAGE	PACKAGING
STP36NF06	STP36NF06	TO-220	TUBE
STP36NF06FP	STP36NF06FP	TO-220FP	TUBE

ABSOLUTE MAXIMUM RATINGS

Symbol	Parameter	Value		Unit
		STP36NF06	STP36NF06FP	
V_{DS}	Drain-source Voltage (V_{GS} = 0)	60		V
V_{DGR}	Drain-gate Voltage (R_{GS} = 20 kΩ)	60		V
V_{GS}	Gate- source Voltage	± 20		V
I_D	Drain Current (continuous) at T_C = 25°C	30	18(*)	A
I_D	Drain Current (continuous) at T_C = 100°C	21	12	A
I_{DM}(•)	Drain Current (pulsed)	120	72	A
P_{tot}	Total Dissipation at T_C = 25°C	70	25	W
	Derating Factor	0.47	0.17	W/°C
dv/dt (1)	Peak Diode Recovery voltage slope	20		V/ns
E_{AS} (2)	Single Pulse Avalanche Energy	200		mJ
T_{stg}	Storage Temperature	-55 to 175		°C
T_j	Max. Operating Junction Temperature			

(•) Pulse width limited by safe operating area.
(*) Current Limited by Package

(1) I_{SD} ≤36A, di/dt ≤400A/µs, V_{DD} ≤ $V_{(BR)DSS}$, T_j ≤ T_{JMAX}
(2) Starting T_j = 25 °C, I_D = 18 A, V_{DD} = 45V

www.DataSheet4U.com

THERMAL DATA

			TO-220	TO-220FP	
Rthj-case	Thermal Resistance Junction-case	Max	2.14	6	°C/W
Rthj-amb T_l	Thermal Resistance Junction-ambient Maximum Lead Temperature For Soldering Purpose (1.6 mm from case, for 10 sec)	Max	62.5 300		°C/W °C

ELECTRICAL CHARACTERISTICS (T_{case} = 25 °C unless otherwise specified)

OFF

Symbol	Parameter	Test Conditions	Min.	Typ.	Max.	Unit
$V_{(BR)DSS}$	Drain-source Breakdown Voltage	I_D = 250 µA, V_{GS} = 0	60			V
I_{DSS}	Zero Gate Voltage Drain Current (V_{GS} = 0)	V_{DS} = Max Rating V_{DS} = Max Rating T_C = 125°C			1 10	µA µA
I_{GSS}	Gate-body Leakage Current (V_{DS} = 0)	V_{GS} = ± 20 V			±100	nA

ON (*)

Symbol	Parameter	Test Conditions	Min.	Typ.	Max.	Unit
$V_{GS(th)}$	Gate Threshold Voltage	V_{DS} = V_{GS} I_D = 250 µA	2			V
$R_{DS(on)}$	Static Drain-source On Resistance	V_{GS} = 10 V I_D = 15 A		0.032	0.040	Ω

DYNAMIC

Symbol	Parameter	Test Conditions	Min.	Typ.	Max.	Unit
g_{fs} (*)	Forward Transconductance	V_{DS} = 25 V I_D = 15 A		12		S
C_{iss} C_{oss} C_{rss}	Input Capacitance Output Capacitance Reverse Transfer Capacitance	V_{DS} = 25V f = 1 MHz V_{GS} = 0		690 170 68		pF pF pF

ELECTRICAL CHARACTERISTICS (continued)

SWITCHING ON

Symbol	Parameter	Test Conditions	Min.	Typ.	Max.	Unit
$t_{d(on)}$ t_r	Turn-on Delay Time Rise Time	V_{DD} = 30 V I_D = 18 A R_G = 4.7 Ω V_{GS} = 10 V (Resistive Load, Figure 3)		10 40		ns ns
Q_g Q_{gs} Q_{gd}	Total Gate Charge Gate-Source Charge Gate-Drain Charge	V_{DD}= 30 V I_D= 36 A V_{GS}= 10V		23 6 9	31	nC nC nC

SWITCHING OFF

Symbol	Parameter	Test Conditions	Min.	Typ.	Max.	Unit
$t_{d(off)}$ t_f	Turn-off Delay Time Fall Time	V_{DD} = 30 V I_D = 18 A R_G = 4.7 Ω V_{GS} =10 V (Resistive Load, Figure 3)		27 9		ns ns

SOURCE DRAIN DIODE

Symbol	Parameter	Test Conditions	Min.	Typ.	Max.	Unit
I_{SD} I_{SDM} (•)	Source-drain Current Source-drain Current (pulsed)				30 120	A A
V_{SD} (*)	Forward On Voltage	I_{SD} = 30 A V_{GS} = 0			1.5	V
t_{rr} Q_{rr} I_{RRM}	Reverse Recovery Time Reverse Recovery Charge Reverse Recovery Current	I_{SD} = 30 A di/dt = 100A/µs V_{DD} = 30 V T_j = 150°C (see test circuit, Figure 5)		65 155 4.8		ns nC A

(*)Pulsed: Pulse duration = 300 µs, duty cycle 1.5 %.
(•)Pulse width limited by safe operating area.

Safe Operating Area for TO-220

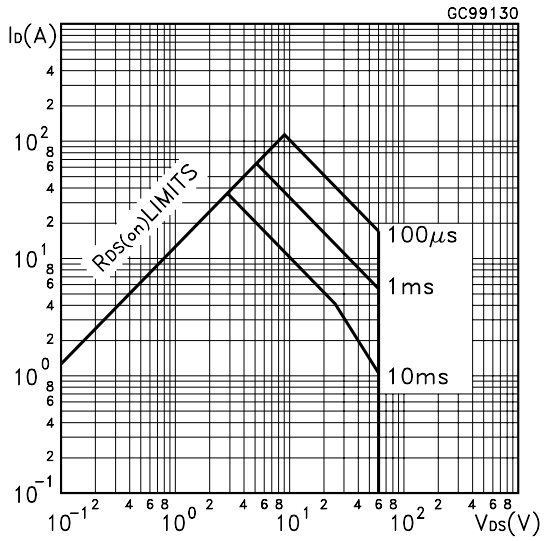

Safe Operating Area for TO-220FP

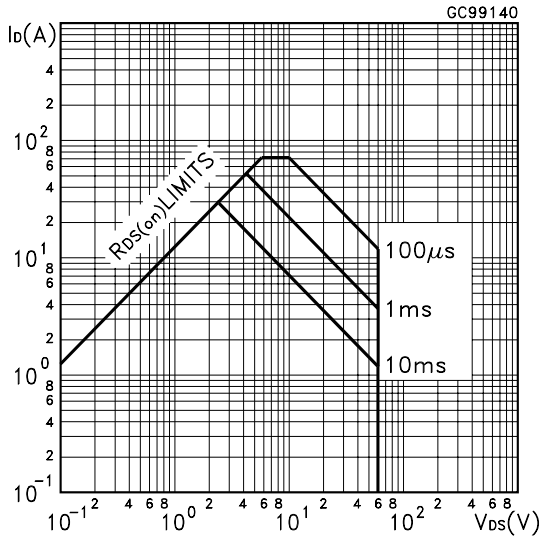

Thermal Impedance

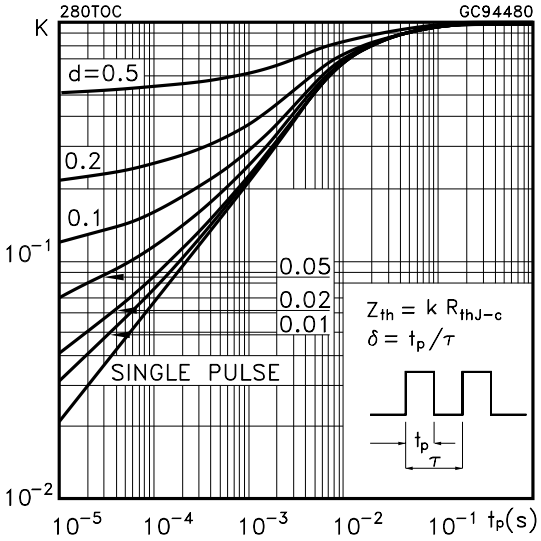

Thermal Impedance for TO-220FP

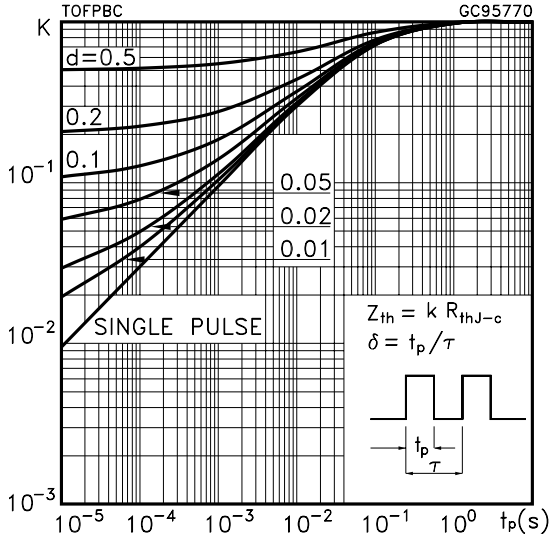

Output Characteristics

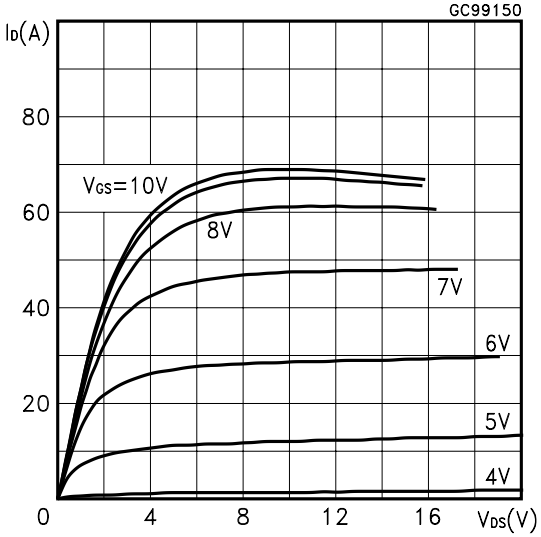

Transfer Characteristics

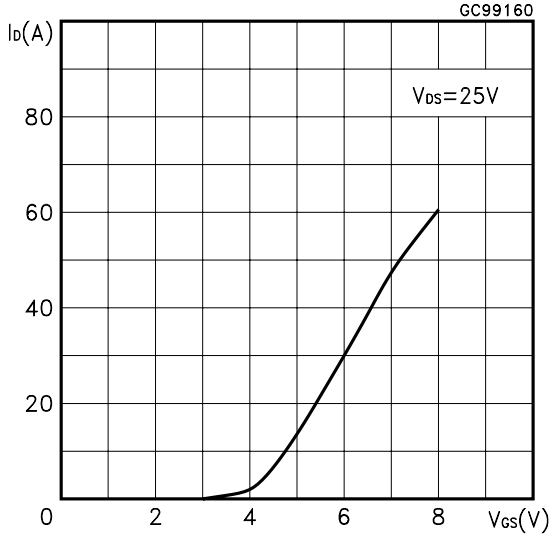

Transconductance

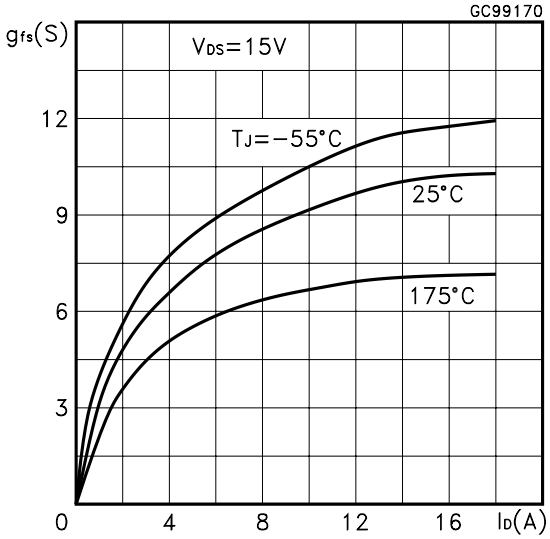

Static Drain-source On Resistance

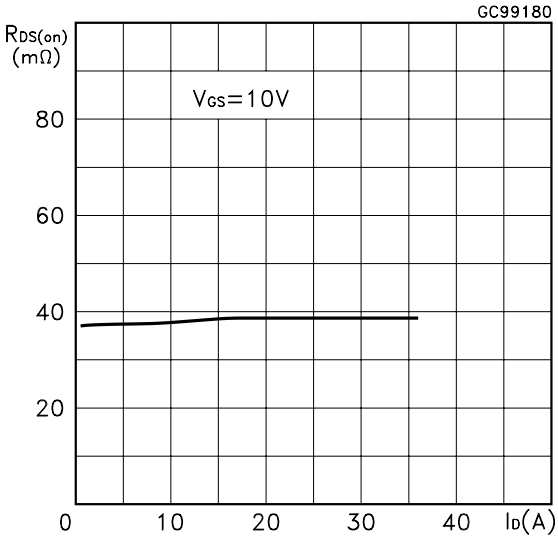

Gate Charge vs Gate-source Voltage

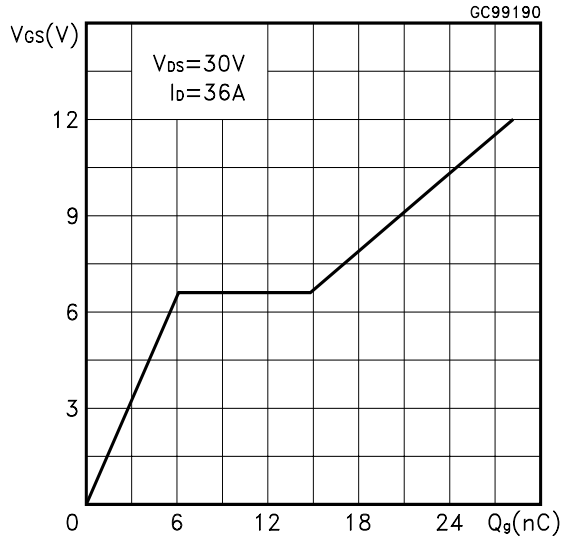

Capacitance Variations

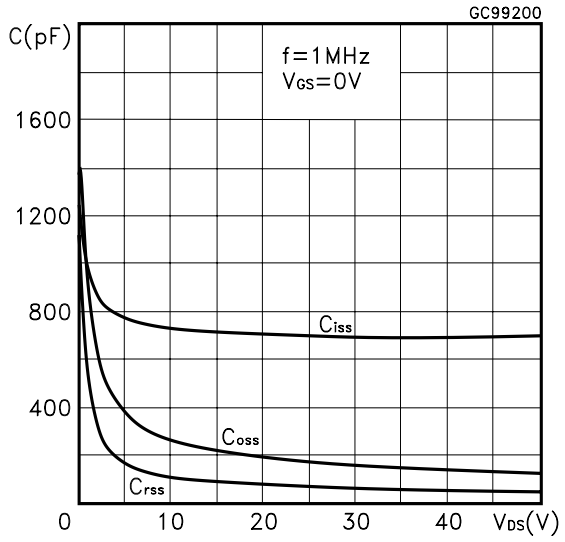

Normalized Gate Threshold Voltage vs Temperature

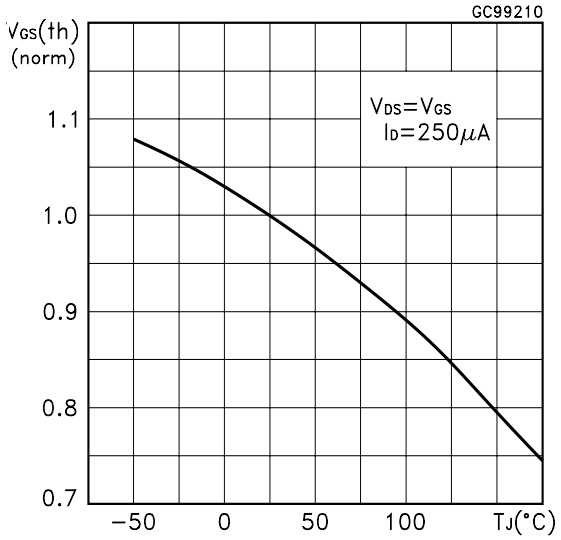

Normalized on Resistance vs Temperature

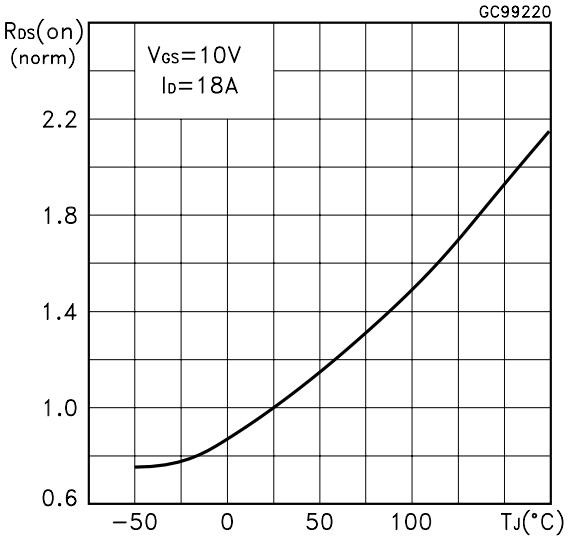

Source-drain Diode Forward Characteristics

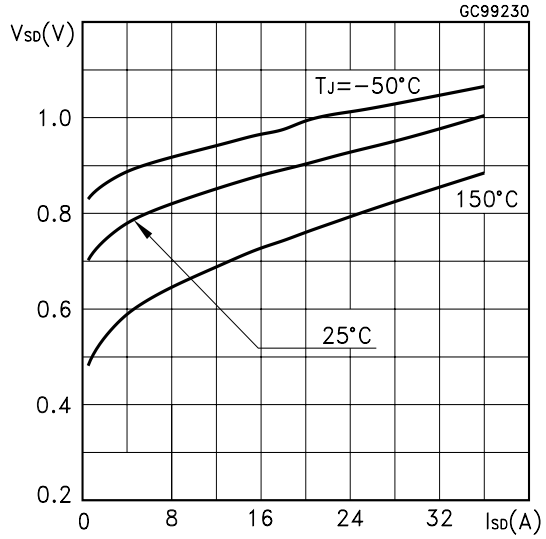

Normalized Breakdown Voltage Temperature

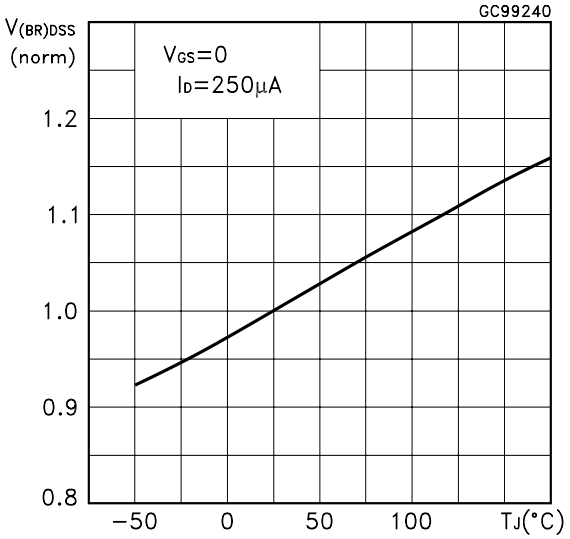

Fig. 1: Unclamped Inductive Load Test Circuit

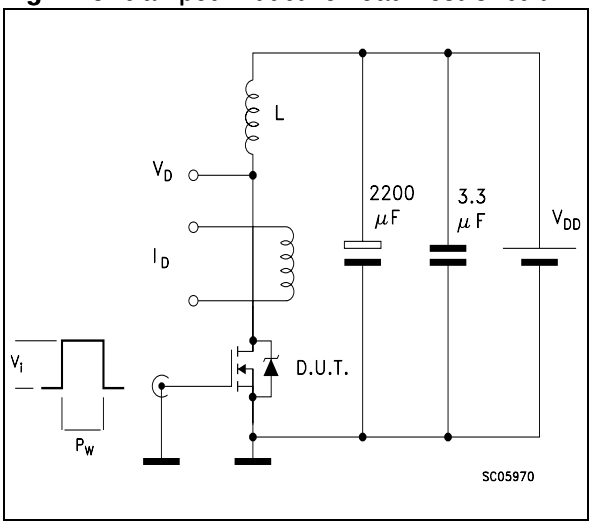

Fig. 2: Unclamped Inductive Waveform

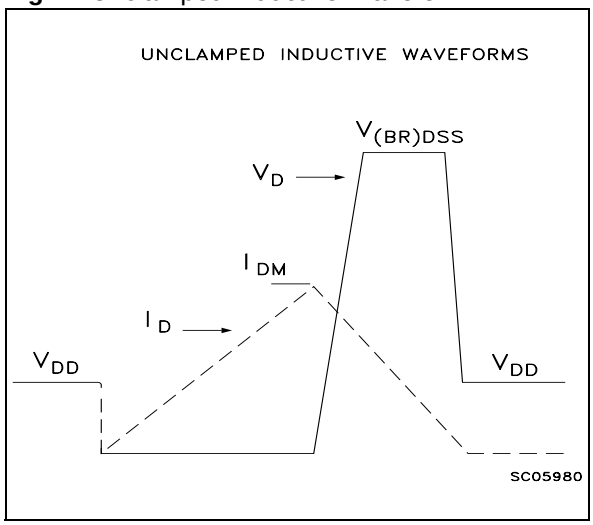

Fig. 3: Switching Times Test Circuits For Resistive Load

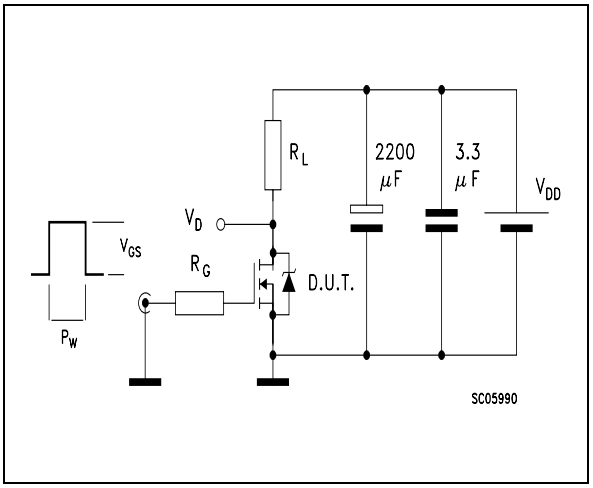

Fig. 4: Gate Charge test Circuit

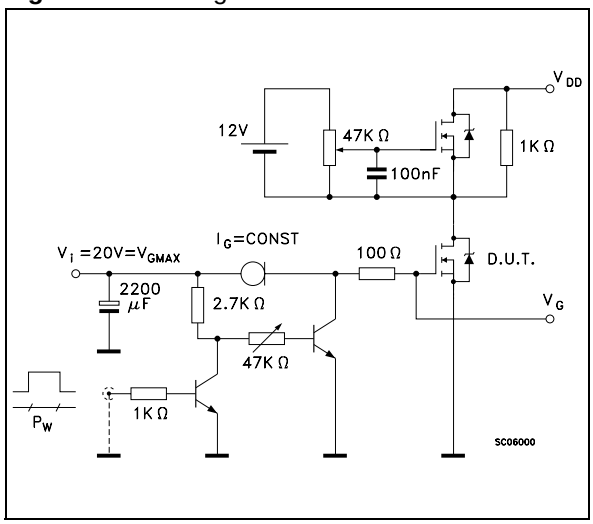

Fig. 5: Test Circuit For Inductive Load Switching And Diode Recovery Times

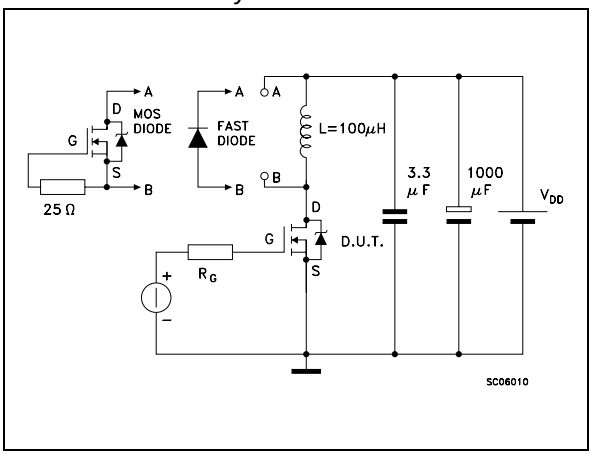

TO-220FP MECHANICAL DATA

DIM.	mm			inch		
	MIN.	TYP.	MAX.	MIN.	TYP.	MAX.
A	4.4		4.6	0.173		0.181
B	2.5		2.7	0.098		0.106
D	2.5		2.75	0.098		0.108
E	0.45		0.7	0.017		0.027
F	0.75		1	0.030		0.039
F1	1.15		1.7	0.045		0.067
F2	1.15		1.7	0.045		0.067
G	4.95		5.2	0.195		0.204
G1	2.4		2.7	0.094		0.106
H	10		10.4	0.393		0.409
L2		16			0.630	
L3	28.6		30.6	1.126		1.204
L4	9.8		10.6	0.385		0.417
L6	15.9		16.4	0.626		0.645
L7	9		9.3	0.354		0.366
Ø	3		3.2	0.118		0.126

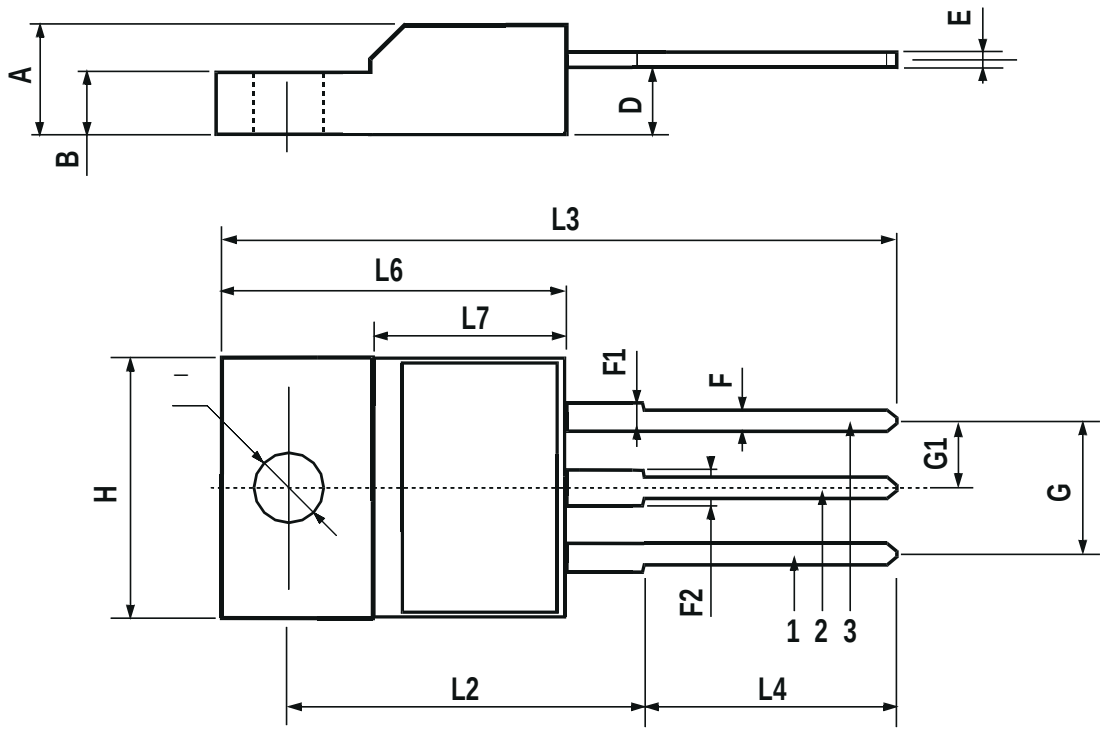

TO-220 MECHANICAL DATA

DIM.	mm.			inch.		
	MIN.	TYP.	MAX.	MIN.	TYP.	TYP.
A	4.4		4.6	0.173		0.181
C	1.23		1.32	0.048		0.051
D	2.40		2.72	0.094		0.107
E	0.49		0.70	0.019		0.027
F	0.61		0.88	0.024		0.034
F1	1.14		1.70	0.044		0.067
F2	1.14		1.70	0.044		0.067
G	4.95		5.15	0.194		0.203
G1	2.40		2.70	0.094		0.106
H2	10		10.40	0.393		0.409
L2		16.40			0.645	
L3		28.90			1.137	
L4	13		14	0.511		0.551
L5	2.65		2.95	0.104		0.116
L6	15.25		15.75	0.600		0.620
L7	6.20		6.60	0.244		0.260
L9	3.50		3.93	0.137		0.154
DIA	3.75		3.85	0.147		0.151

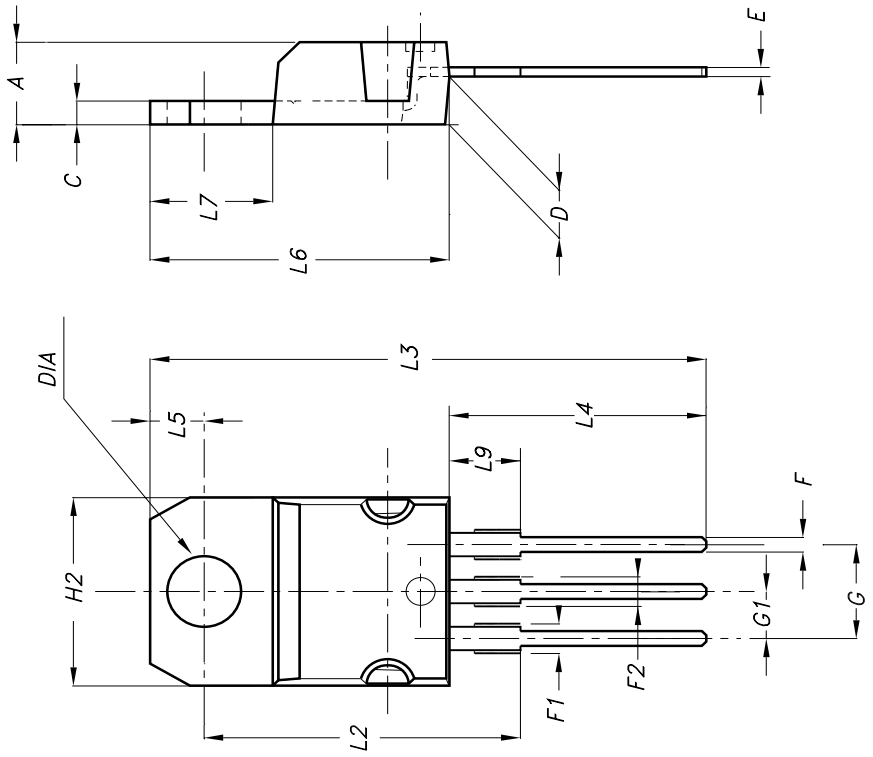

Information furnished is believed to be accurate and reliable. However, STMicroelectronics assumes no responsibility for the consequences of use of such information nor for any infringement of patents or other rights of third parties which may result from its use. No license is granted by implication or otherwise under any patent or patent rights of STMicroelectronics. Specifications mentioned in this publication are subject to change without notice. This publication supersedes and replaces all information previously supplied. STMicroelectronics products are not authorized for use as critical components in life support devices or systems without express written approval of STMicroelectronics.

The ST logo is registered trademark of STMicroelectronics
All other names are the property of their respective owners.

® 2003 STMicroelectronics - All Rights Reserved

STMicroelectronics GROUP OF COMPANIES
Australia - Belgium - Brazil - Canada - China - Czech Republic - Finland - France - Germany - Hong Kong - India - Israel - Italy - Japan - Malaysia - Malta - Morocco -Singapore - Spain - Sweden - Switzerland - United Kingdom - United States.

www.st.com